Heavy Duty Planetary
RPH 42.2

- Rated Line pull 42.2 kN
- Recommended cable 3/8”
- Available with a Blocked Clutch
- Motor spool (open center) directional control valve required
- Available with air shift
- EN 14492-1 Compliant
- Made in the USA

RPH 42.2 Features

- Spring applied, hydraulic released multi disc brake
- Quiet brake, designed for low maintenance
- High efficiency planetary gear set
- Foot mount or mid mount
- Fairlead and cable tension optional
- Manual or air operated free spool
- Winch reel-in rotation can be changed by reversing position of cartridge and plug in counterbalance valve

Specifications

Rated Line Pull	..... 42.2 kN
Gear Reduction	..... 5.1:1
Weight (without cable)	RPH 42.2 STD Drum ..... 49.9 kgs RPH 42.2 “Y” Drum..... 47.6 kgs

LAYER OF CABLE		1	2	3	4
*RATED LINE PULL PER LAYER	kN	42.2	35.2	30.2	26.11
CABLE CAPACITY RPH 42.2 (STD. DRUM)	M.	6	15	24	36
CABLE CAPACITY RPH 42.2 (“Y” DRUM)	M.	4	9	16	24
LINE SPEED (at 56.7 LPM)	MPM	9.7	11.2	13.0	14.8

* These specifications are based on recommended wire rope of 10 mm 1960 grade wire rope.

Winch Dimensions
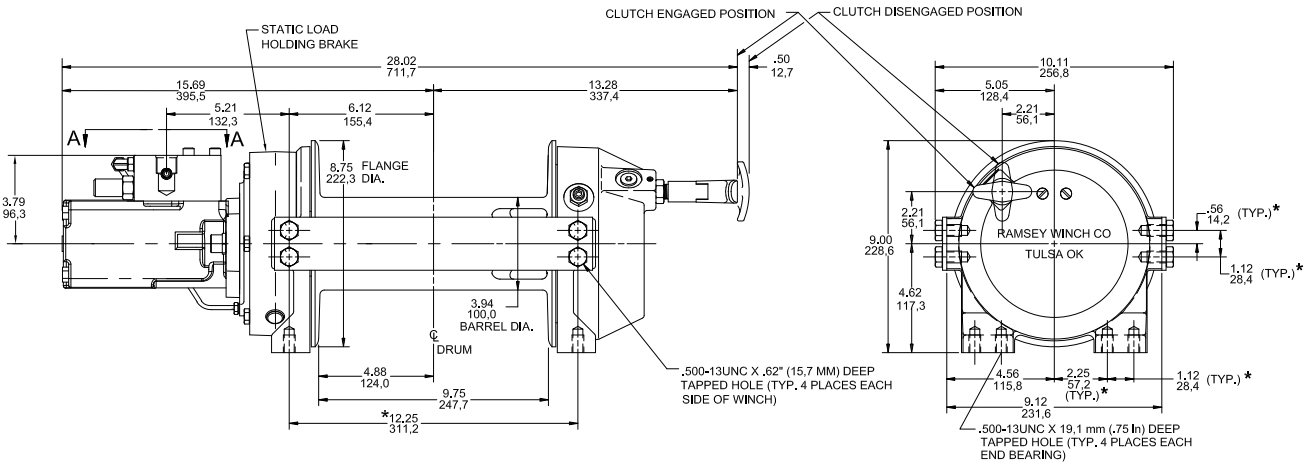
WINCH MODEL	A MM	B MM	C MM	D MM	E MM
RPH 42.2 STD. DRUM	247.7	311.2	395.5	337.4	725.9
RPH 42.2 “Y” DRUM	165.1	228.6	357.3	296.2	643.4